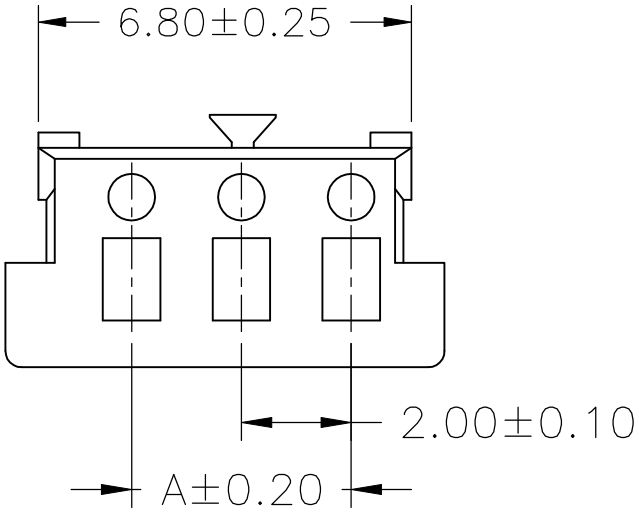

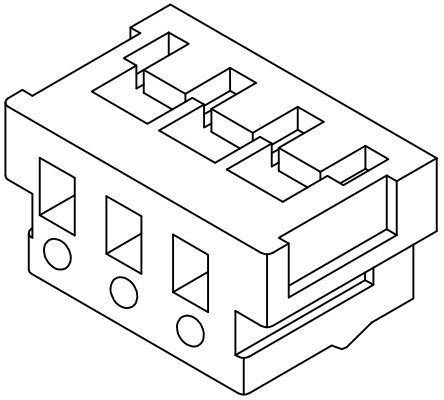

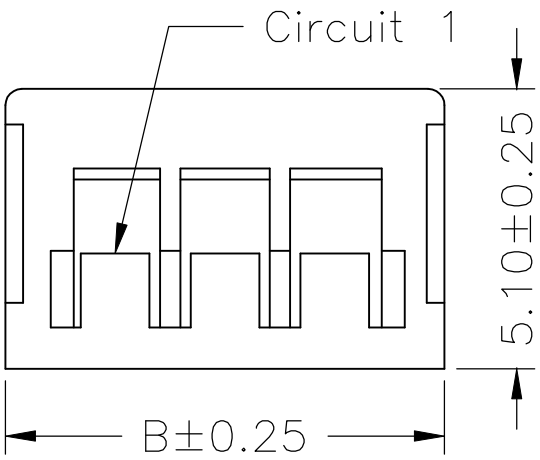

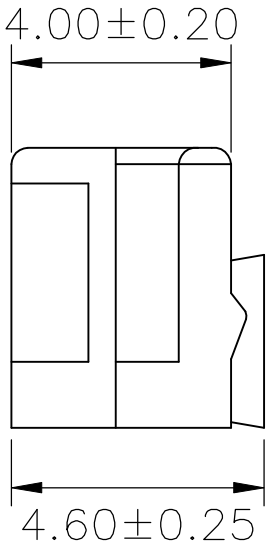

SPECIFICATIONS

Current Rating: 1A AC,DC
Voltage Rating: 100V AC,DC
Temperature Range: −25°C ~ +85°C
Contact Resistance: 20mΩ Max.
Insulation Resistance: 1000MΩ Min.
Withstanding Voltage: 800V AC/minute
Material: Nylon 66,UL94V−0

CT-H-xx-LF
LEADFREE

RoHS Compliant

Ordering Information & Dimensions

PART NO.	Dimensions	
	A	B
CT -H- 02	2.00	6.00
CT -H-03	4.00	8.00
CT -H-04	6.00	10.00
CT -H-05	8.00	12.00
CT -H-06	10.00	14.00
CT -H-07	12.00	16.00
CT -H-08	14.00	18.00
CT -H-09	16.00	20.00
CT -H-10	18.00	22.00
CT -H-11	20.00	24.00
CT -H-12	22.00	26.00
CT -H-13	24.00	28.00
CT -H-14	26.00	30.00
CT -H-15	28.00	32.00

Промэлектроника
Адрес для заказов: pr@promelec.ru

ПРОМЭЛЕКТРОНИКА

PART NO. CT-H-xx			
DWG NO. CT-H-xx	CHECKED BY CY	TOLERANCES ARE .X ± 0.2 .XX ± .XXX ± AWG	DESCRIP TION: 2.00mm PITCH HOUSING
FILE NO.	DRAWING BY		
UNIT / mm SCALE 1 : 1	PROJECTION		AREA / REVISIONS / HK / DATE