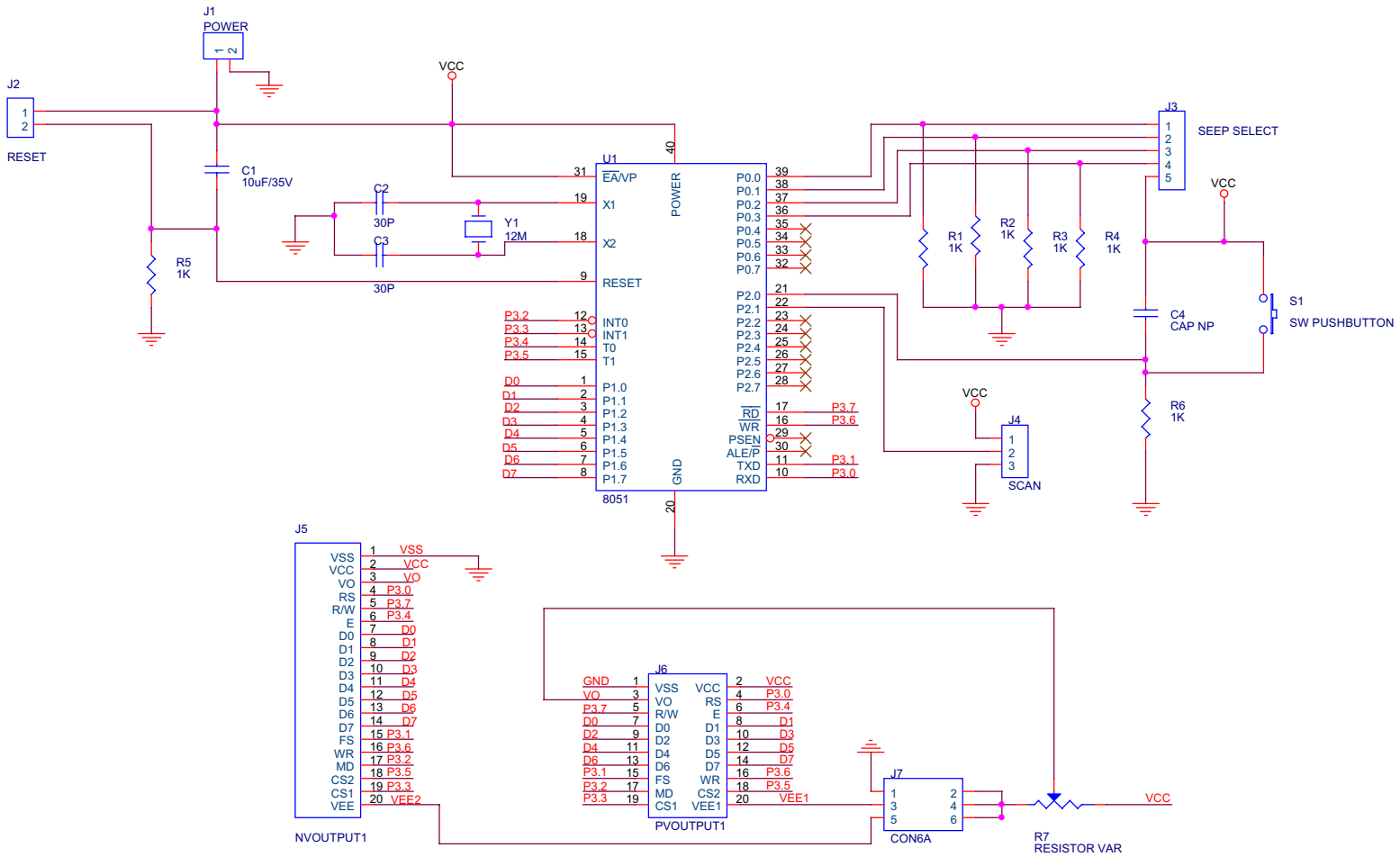

Title	{Title}	
Size B	Document Number {Doc}	Rev {RevCode}
Date: Thursday, May 04, 2000	Sheet 1 of 1	